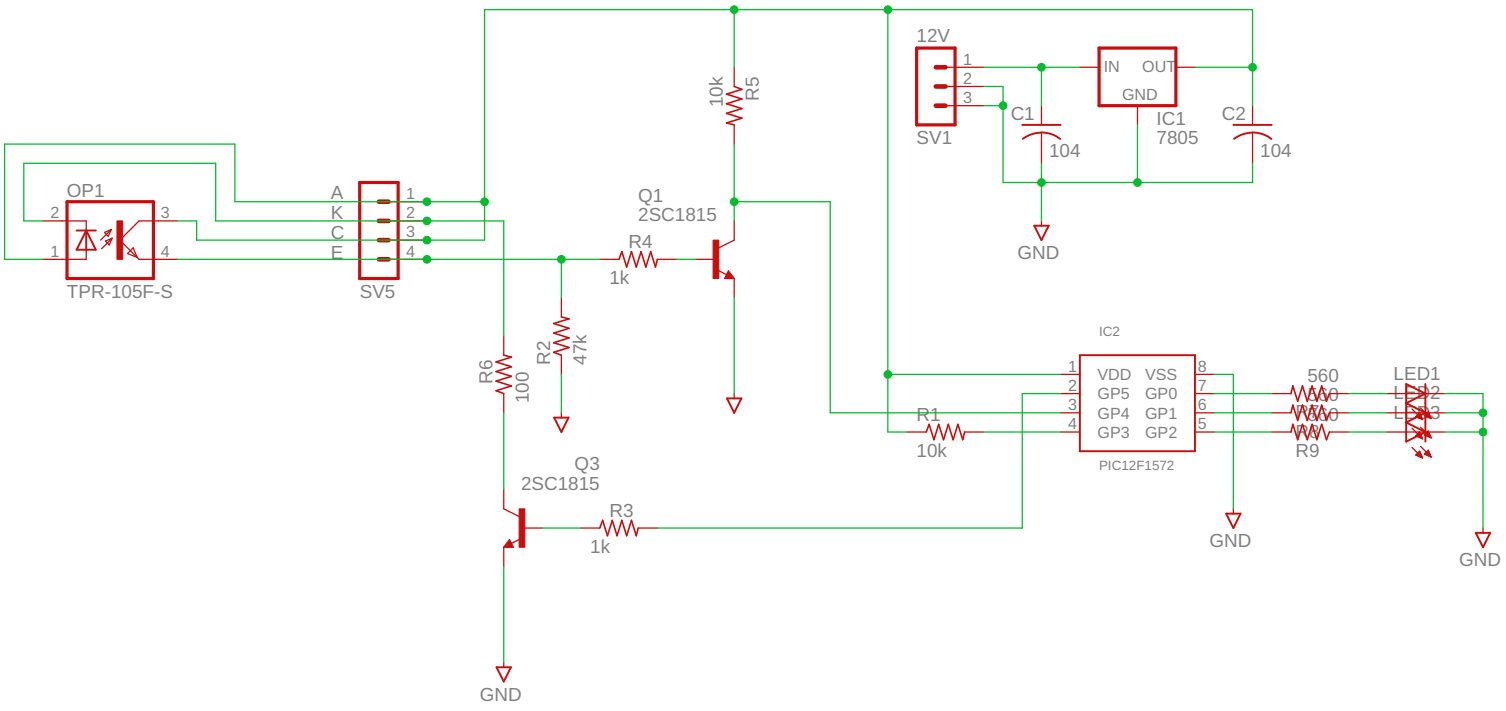
OP1
TPR-105F-S
A
K
C
E
SV5
R6
100
R2
47k
R4
1k
Q1
2SC1815
10k
R5
Q3
2SC1815
R3
1k
GND
12V
SV1
C1
104
IN
OUT
GND
IC1
7805
C2
104
GND
IC2
VDD
VSS
GP5
GP0
GP4
GP1
GP3
GP2
PIC12F1572
R1
10k
560
R9
LED1
GND
GND