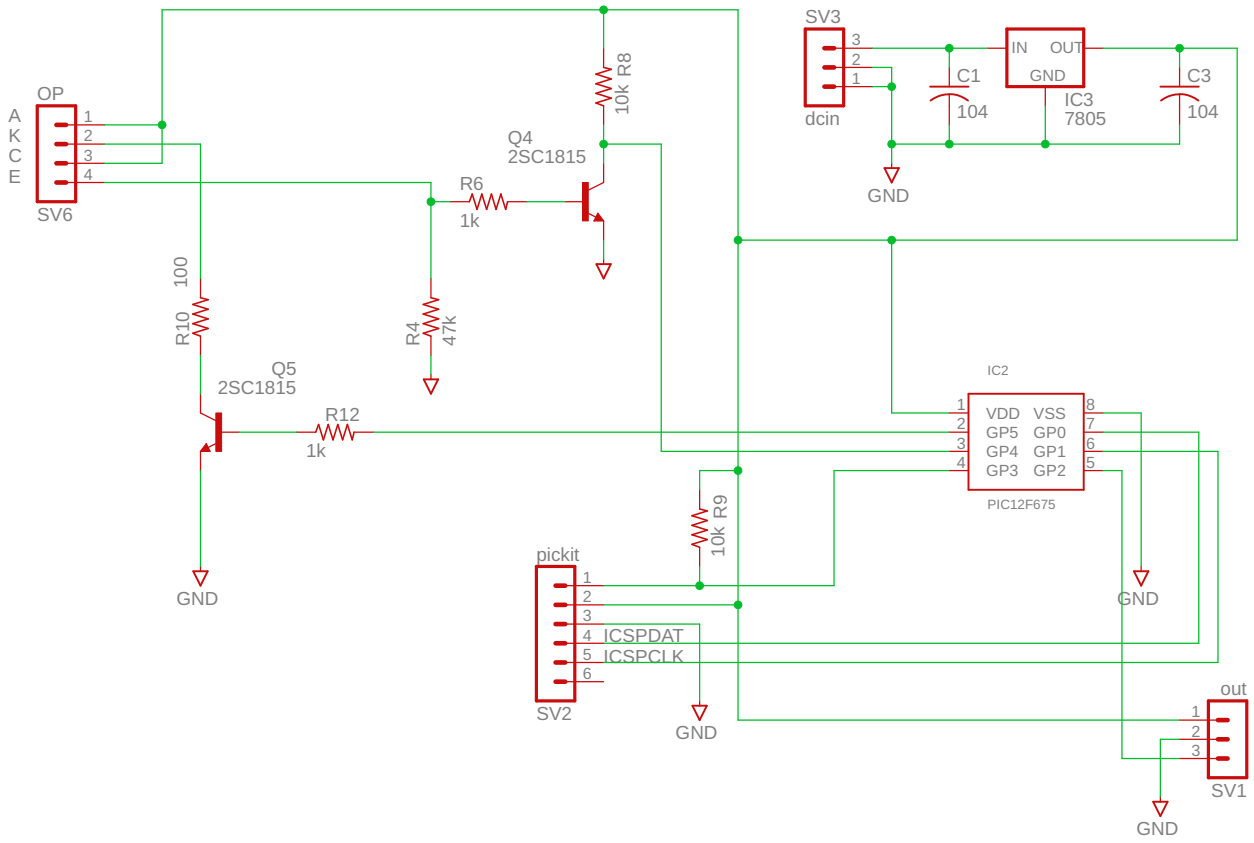
OP
A
K
C
E
1
2
3
4
SV6
SV3
3
2
1
dcin
C1
104
IN
OUT
GND
IC3
7805
C3
104
GND
10k R8
Q4
2SC1815
R6
1k
100
R10
R4
47k
Q5
2SC1815
R12
1k
GND
IC2
VDD
VSS
GP5
GP0
GP4
GP1
GP3
GP2
PIC12F675
10k R9
pickit
ICSPDAT
ICSPCLK
SV2
GND
GND
out
SV1
GND