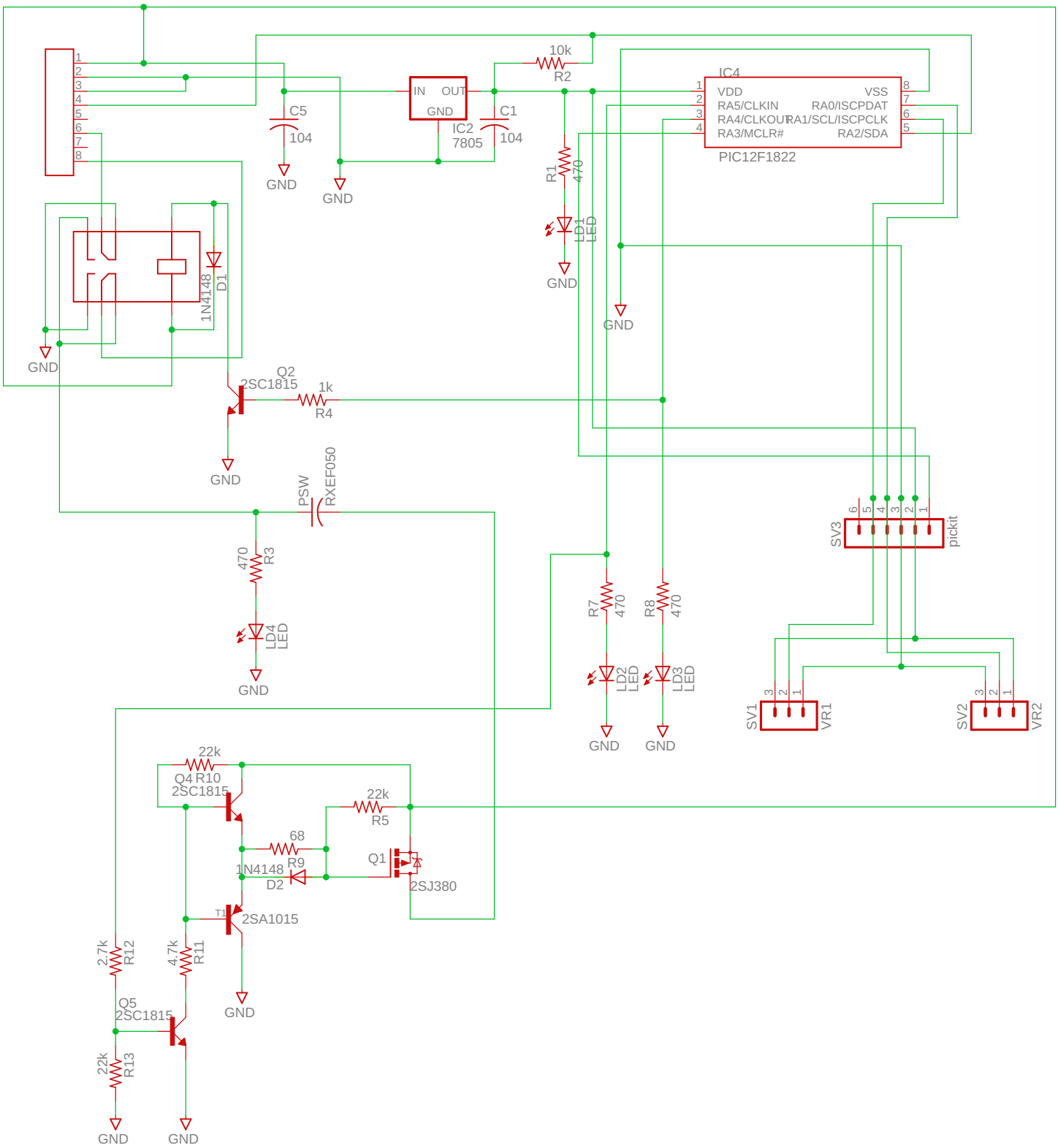
IC4
VDD
VSS
RA5/CLKIN
RA0/ISCPDAT
RA4/CLKOUT
RA1/SCL/ISCPCLK
RA3/MCLR#
RA2/SDA
PIC12F1822
IN
OUT
GND
IC2
7805
C5
104
C1
104
10k
R2
R1
470
LD1
LED
1N4148
D1
Q2
2SC1815
1k
R4
PSW
RXEF050
470
R3
LD4
LED
R7
470
R8
470
LD2
LED
LD3
LED
SV3
pickit
SV1
VR1
SV2
VR2
22k
Q4 R10
2SC1815
22k
R5
68
R9
1N4148
D2
Q1
2SJ380
T1
2SA1015
2.7k
R12
4.7k
R11
Q5
2SC1815
22k
R13
GND