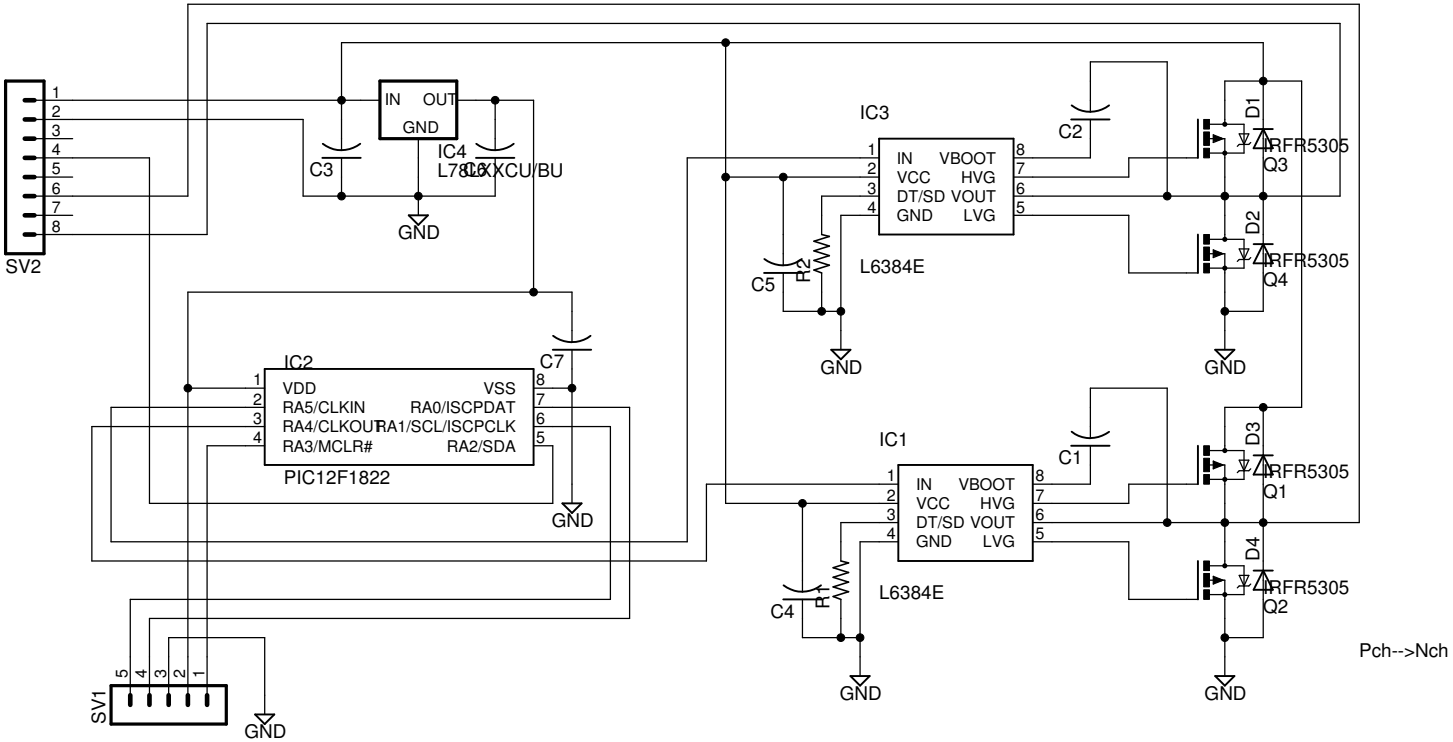
SV2
1
2
3
4
5
6
7
8
IN
OUT
GND
IC4
L78L05XCU/BU
C3
GND
IC3
IN
VBOOT
VCC
HVG
DT/SD
VOUT
GND
LVG
L6384E
C2
C5
R2
GND
GND
D1
IRFR5305
Q3
D2
IRFR5305
Q4
IC2
VDD
VSS
RA5/CLKIN
RA0/ISCPDAT
RA4/CLKOUT
RA1/SCL/ISCPCLK
RA3/MCLR#
RA2/SDA
PIC12F1822
C7
GND
IC1
IN
VBOOT
VCC
HVG
DT/SD
VOUT
GND
LVG
L6384E
C1
C4
R1
GND
GND
D3
IRFR5305
Q1
D4
IRFR5305
Q2
Pch-->Nch
SV1
5
4
3
2
1
GND