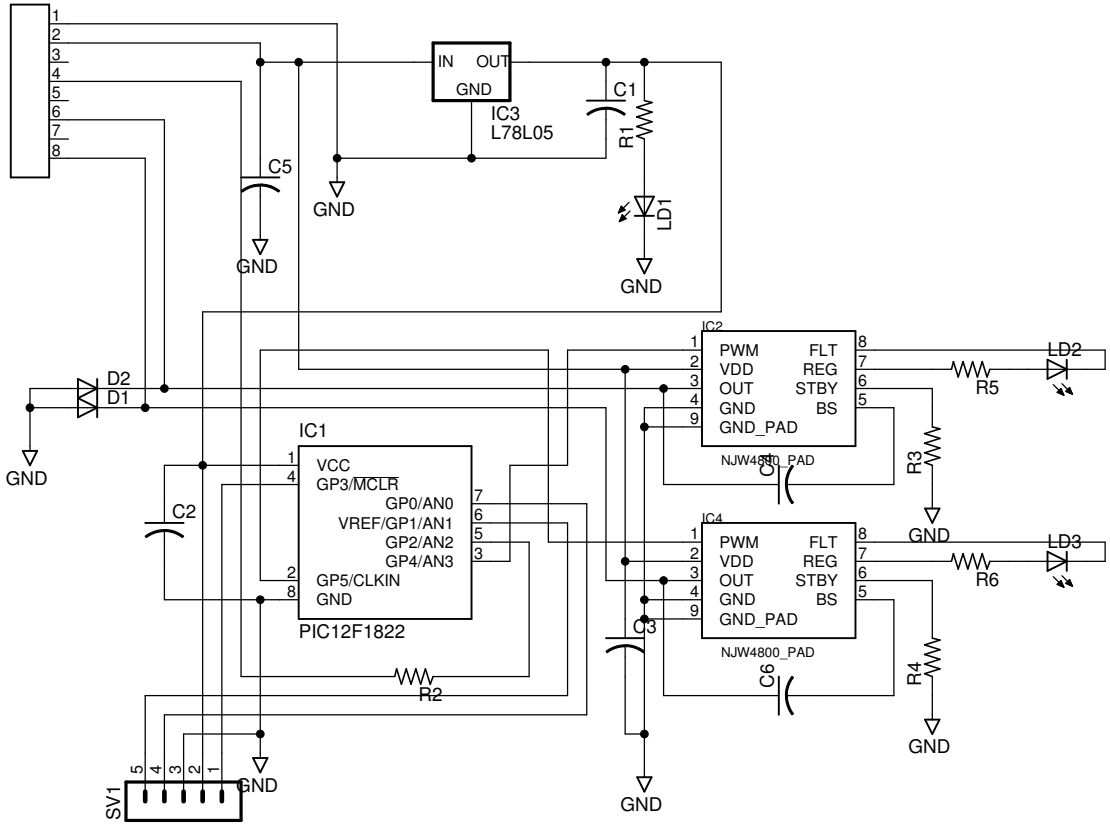
IN
OUT
GND
IC3
L78L05
C1
R1
LD1
C5
GND
D2
D1
IC1
VCC
GP3/MCLR
GP0/AN0
VREF/GP1/AN1
GP2/AN2
GP4/AN3
GP5/CLKIN
GND
PIC12F1822
C2
R2
SV1
IC2
PWM
VDD
OUT
GND
GND_PAD
FLT
REG
STBY
BS
NJW4800_PAD
C3
R3
R5
LD2
IC4
C6
R4
R6
LD3