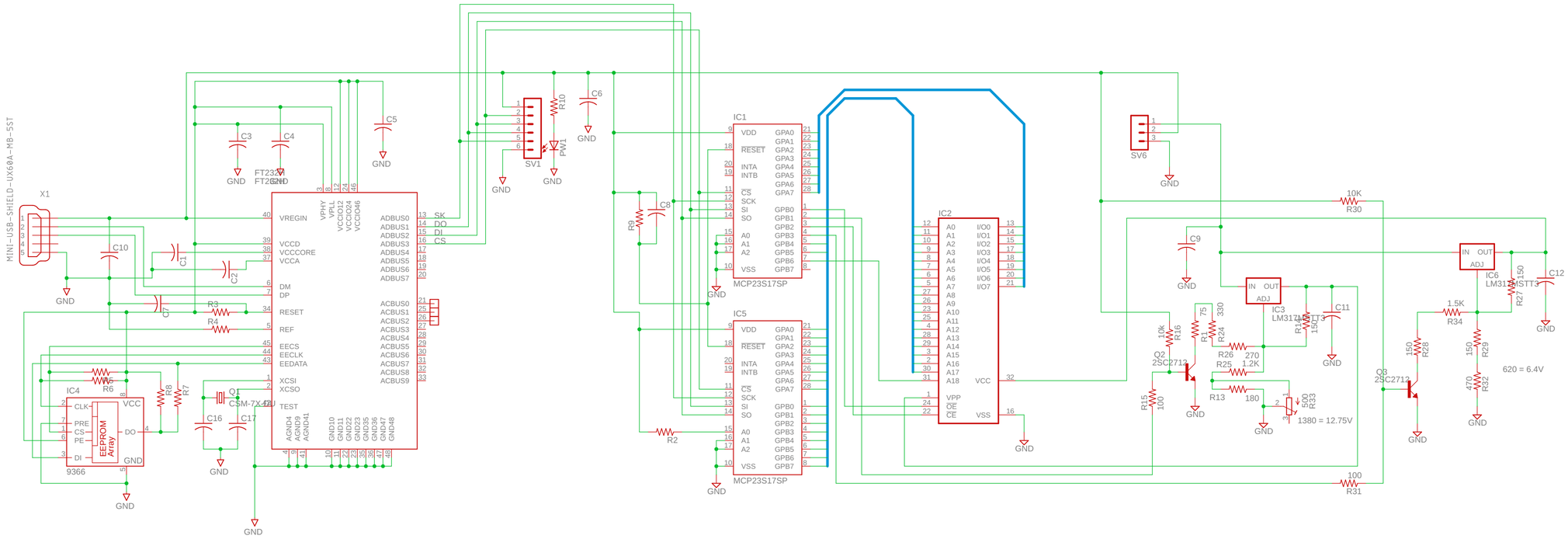
MINI-USB-SHIELD-UX60A-MB-5ST
X1
C10
C1
C2
C7
R3
R4
C3
C4
C5
FT232RL
FT232RQ
VREGIN
VCCD
VCCCORE
VCCA
DM
DP
RESET
REF
EECS
EECLK
EEDATA
XCSI
XCSO
TEST
VPHY
VPLL
VCCIO12
VCCIO24
VCCIO46
ADBUS0
ADBUS1
ADBUS2
ADBUS3
ADBUS4
ADBUS5
ADBUS6
ADBUS7
ACBUS0
ACBUS1
ACBUS2
ACBUS3
ACBUS4
ACBUS5
ACBUS6
ACBUS7
ACBUS8
ACBUS9
SK
DO
DI
CS
AGND4
AGND9
AGND41
GND10
GND11
GND22
GND23
GND35
GND36
GND47
GND48
IC4
9366
EEPROM Array
CLK
PRE
CS
PE
DI
VCC
DO
GND
R6
R5
R8
R7
Q1
CSM-7X-12U
C16
C17
SV1
R10
PW1
C6
C8
R9
R2
IC1
MCP23S17SP
IC5
MCP23S17SP
VDD
RESET
INTA
INTB
CS
SCK
SI
SO
A0
A1
A2
VSS
GPA0
GPA1
GPA2
GPA3
GPA4
GPA5
GPA6
GPA7
GPB0
GPB1
GPB2
GPB3
GPB4
GPB5
GPB6
GPB7
IC2
A0
A1
A2
A3
A4
A5
A6
A7
A8
A9
A10
A11
A12
A13
A14
A15
A16
A17
A18
VPP
OE
CE
I/O0
I/O1
I/O2
I/O3
I/O4
I/O5
I/O6
I/O7
VCC
VSS
SV6
10K
R30
C9
IC3
LM317MDT
IN
OUT
ADJ
C11
R17
150
R14
75
R1
330
R24
R16
10k
Q2
2SC2712
R26
270
R25
1.2K
R13
180
R15
100
500
R23
1380 = 12.75V
100
R31
IC6
LM317MSTT3
C12
R27
150
1.5K
R34
150
R28
150
R29
470
R32
Q3
2SC2712
620 = 6.4V