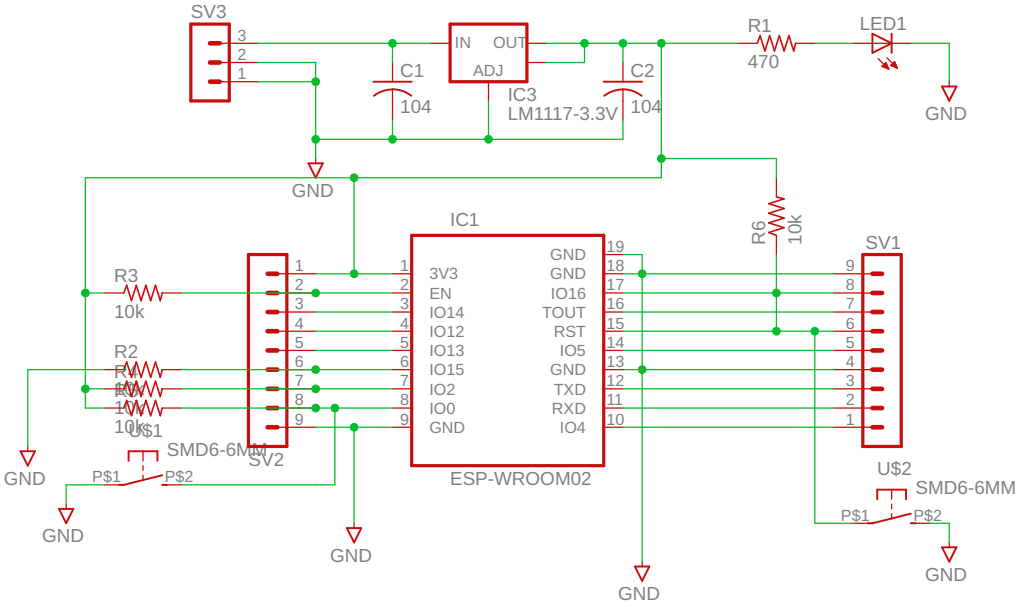
SV3
3
2
1
IN
OUT
ADJ
C1
104
IC3
LM1117-3.3V
C2
104
R1
470
LED1
GND
GND
IC1
R6
10k
SV1
R3
10k
R2
10k
R1
10k
U$1
SMD6-6MM
SV2
P$1
P$2
GND
GND
3V3
EN
IO14
IO12
IO13
IO15
IO2
IO0
GND
GND
GND
IO16
TOUT
RST
IO5
GND
TXD
RXD
IO4
ESP-WROOM02
GND
U$2
SMD6-6MM
P$1
P$2
GND
GND