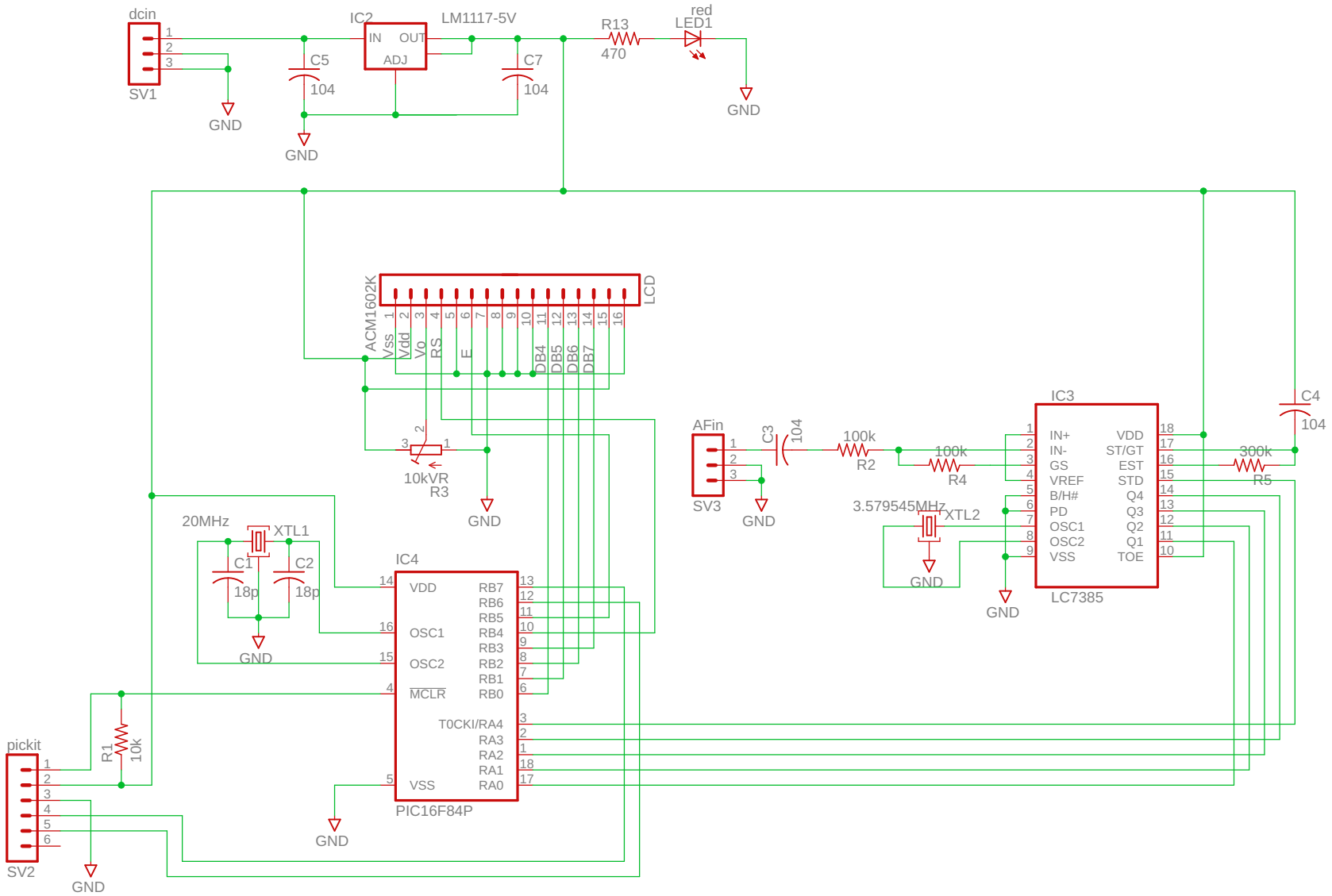
dcin
SV1
GND
IC2
LM1117-5V
IN
OUT
ADJ
C5
104
C7
104
R13
470
red
LED1
GND
GND
ACM1602K
LCD
Vss
Vdd
Vo
RS
E
DB4
DB5
DB6
DB7
10kVR
R3
GND
AFin
SV3
C3
104
100k
R2
100k
R4
IC3
IN+
IN-
GS
VREF
B/H#
PD
OSC1
OSC2
VSS
VDD
ST/GT
EST
STD
Q4
Q3
Q2
Q1
TOE
LC7385
3.579545MHz
XTL2
GND
GND
C4
104
300k
R5
20MHz
XTL1
C1
18p
C2
18p
GND
IC4
VDD
OSC1
OSC2
MCLR
VSS
RB7
RB6
RB5
RB4
RB3
RB2
RB1
RB0
T0CKI/RA4
RA3
RA2
RA1
RA0
PIC16F84P
GND
pickit
SV2
R1
10k
GND